VESANI
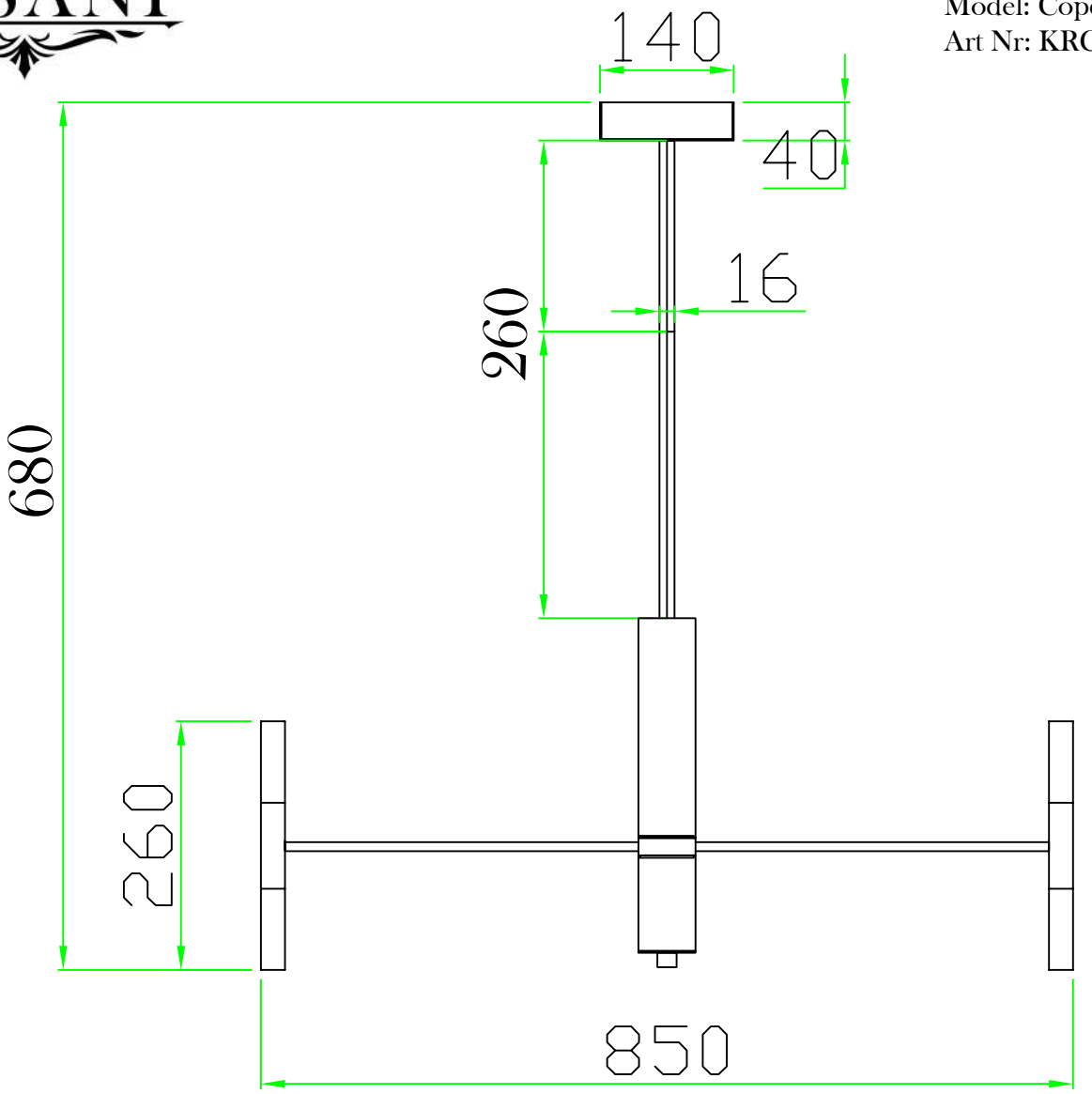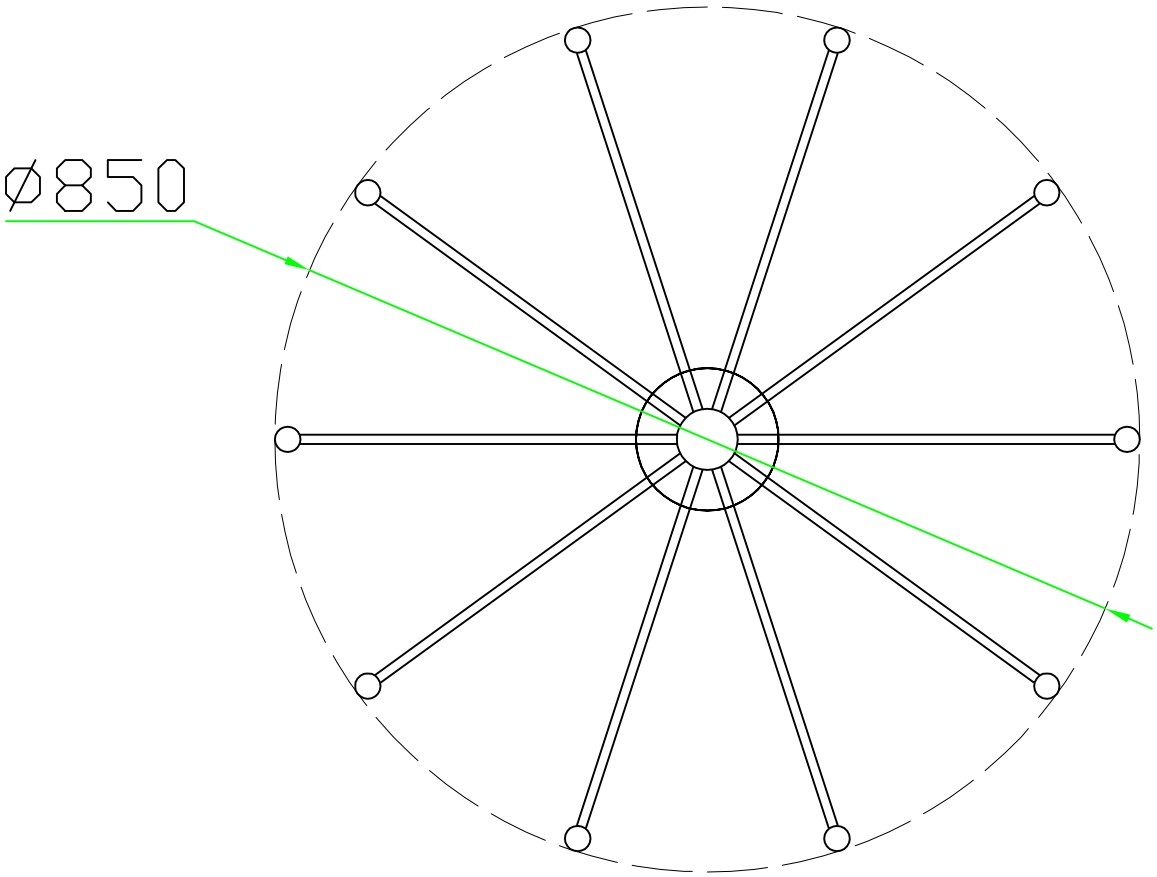
Model: Copenhagen 85
Art Nr: KRCOP851